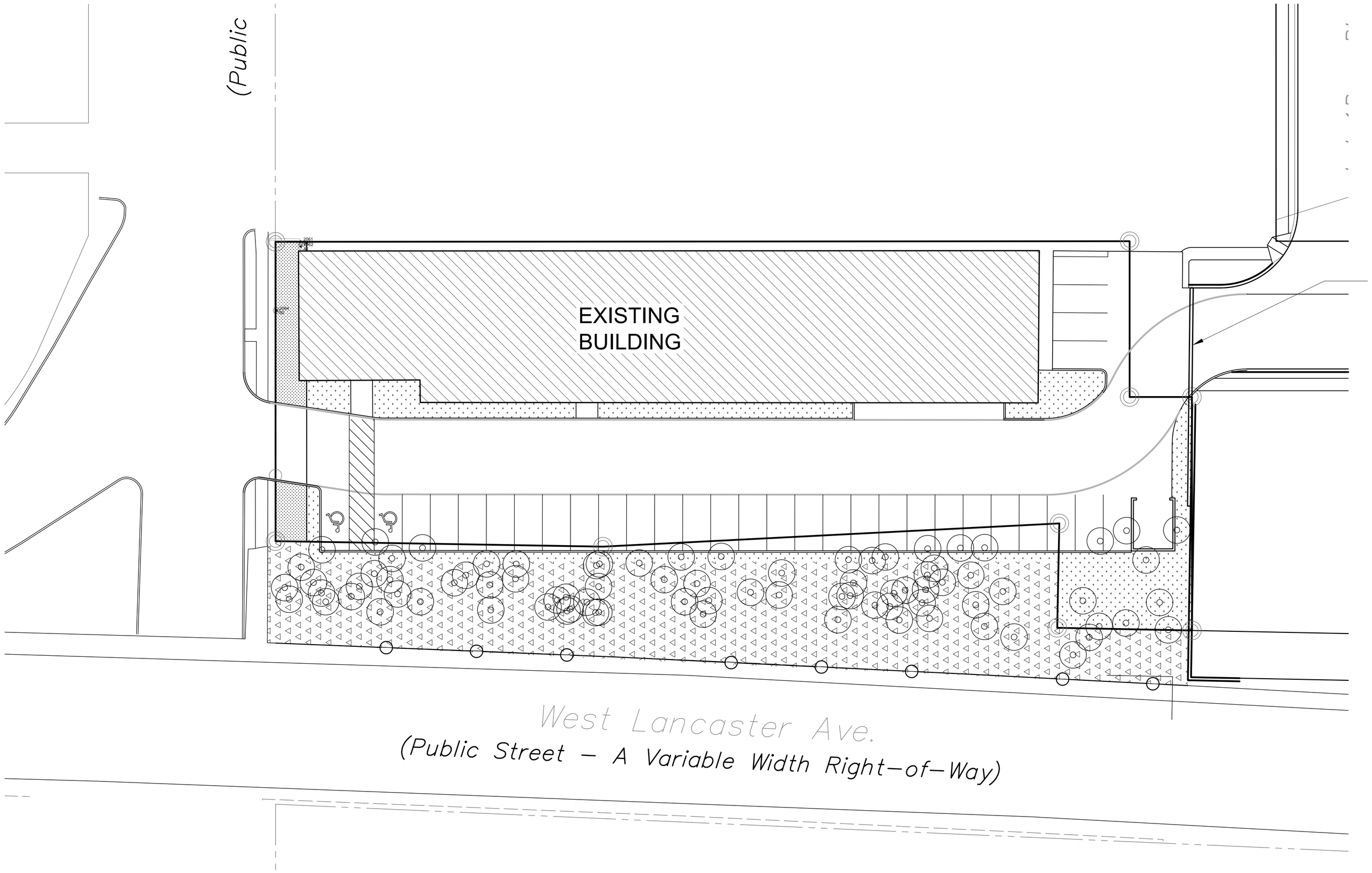

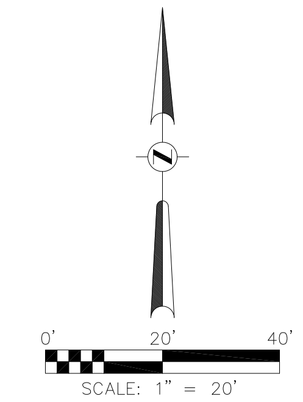

PROPOSED EXIT ONLY
ROLLING GATE
FOR SO7

LEGEND

- EXISTING TREE
- ONSITE LANDSCAPE
- FOCH ROW LANDSCAPE
- LANCASTER ROW LANDSCAPE
- LANCASTER ROW LANDSCAPE
- FUTURE WROUGHT IRON FENCE

SITE PLAN EXHIBIT

SCALE 1"=20'

PROJECT DATA:

TOTAL SITE AREA:	27,442 SF (0.630 ACRES)
EXISTING ZONING:	MU-2
EXISTING BUILDING:	11,634 SF (FOOTPRINT)
EXISTING PARKING:	8 SPACES
PROPOSED ZONING:	MU-2 (NO CHANGE)
PROPOSED BUILDING:	11,287 SF (FOOTPRINT)
PROPOSED PARKING:	30 REGULAR
	2 HANDICAP
ROW PURCHASE	1,776 SF
TOTAL ESTIMATED SITE AREA	29,218 SF (0.671 ACRES)

LANDSCAPE DATA:

LANDSCAPE REQUIRED:	2,922 SF (10.0%)
LANDSCAPE PROVIDED:	3,459 SF (11.8%)

SOLI DEO GLORIA

#	REVISION	DATE

SITE PLAN
EXHIBIT

1111 FOCH STREET
FORT WORTH

MOBIUS DESIGN, LLC

DATE:
JOB NUMBER: 2009-003
ISSUED: FEBRUARY
SCALE: 1"= 20' H

SHEET
01 OF 01